RP-IND

Direct/Indirect Ring

LUMOS
Architectural Lighting

BI-DIRECTIONAL ILLUMINATION FROM A RING WITH AN INNER RING THAT CREATES A SOFT GLOWING EFFECT

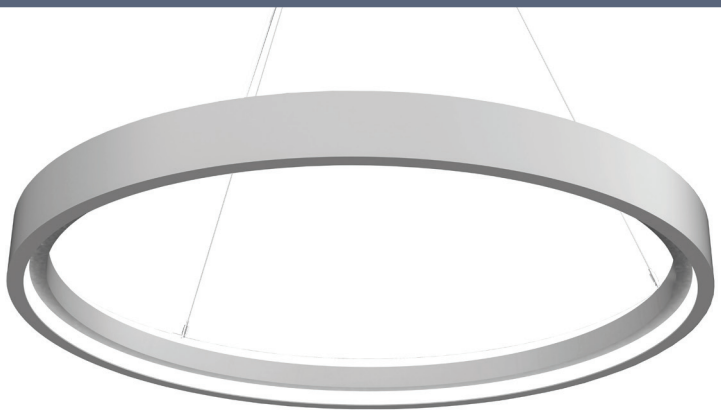

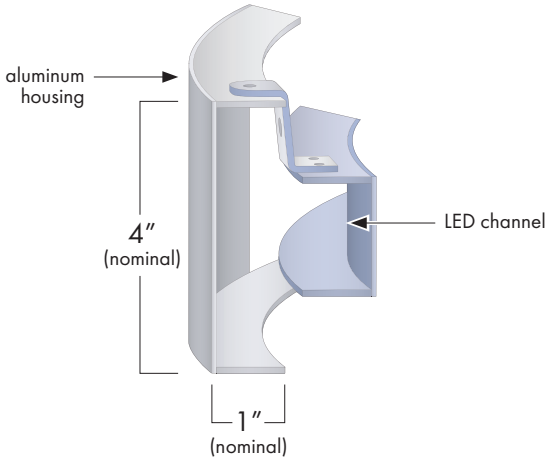

Features

Diameter:	24″ to 144″ (nominal)
Output:	56 LPW
Housing:	Aluminum
Mounting:	Pendant or surface
Driver:	Inside canopy or remote
Weight:	3 lb/ft (based on ∅)
Certification:	UL listed for damp location use
Warranty:	5-year limited warranty
Photometry:	Third-party photometric report and IES files on the website

- Rings up to 72″ diameter ship in one piece
- Mounting option for multi-ring clusters
- RGB+W in standard lumen output range
- Acoustic options available

RP-IND
Direct/Indirect Ring

LUMOS Architectural Lighting

Project: _____ Type: _____ Date: _____

Order: _____

Example: MOD - RP-IND - 60 - MD10000LM - 940 - DIM - MCC - ASL - SCC - RMT

Order Guide

MOD / CSM — RP-IND — Ø (in.) — Output — LED — Driver — Mounting — Fixture Finish — Canopy | Cord — Options — Acoustic Options

Ø (in.)

24
36
48
60
72
84
96
120
144

Output p.3

SO standard 271 lm/linear ft

HO high 543 lm/linear ft

MD modify lumens and watts (consult factory)

LED p.3

Static White

830	CRI >80	3000°K
835	CRI >80	3500°K
840	CRI >80	4000°K
930	CRI >90	3000°K
935	CRI >90	3500°K
940	CRI >90	4000°K

Dynamic White

TW tunable white 2700-6500 °K

WD warm dim 2200-3500 °K

Red, Green, Blue + White

RGBW30 RGB+W 3000°K
RGBW35 RGB+W 3500°K
RGBW40 RGB+W 4000°K

(consult for TW, WD & RGB+W)

Driver p.3

120-277 VAC

DIM 0-10 V/1%
DIM.1 0-10 V/.1%
DAL DALI
DMX Digital Multiplex (consult factory)

120 VAC

TRC TRIAC/ ELV

Mounting p.4-6

Pendant

SPC single point canopies
MCC muti-cable center canopy (consult for Ø > 96")
MRC multi-ring cluster (consult for submittals)

Power-over-Cable (PoC)

MCC-POC Power-over-Cable with multi-cable center canopy (consult for submittals)

Surface

SRF surface mount

Fixture Finish p.7

Powder Coat

WHT matte white
BLK matte black
ASL anodized silver
GRY matte gray (RAL 7035)
RALX matte RAL color X=code (specify)
CCL custom color (provide chip)

Wood Grain

WG1 ash
WG2 teak
WG3 walnut
WG4 zebrawood

Skin

CFS carbon fiber

Canopy | Cord p.7

Powder Coat

Standard	Canopy Color	Cord Color
WCC	white	white
BCC	black	black
SCC	silver	silver
MBC	white	silver
RAL		
RCW	RALX	white
RCB	RALX	black
RCS	RALX	silver
Custom		
CCW	CCL	white
CCB	CCL	black
CCS	CCL	silver

Options p.7

RMT remote driver
BBU remote battery backup with remote driver

Acoustic Options p.8

Center Panel*

FPL light gray
FPD dark gray
FPB blue
FPG green
FPY yellow
FPR red

*max Ø= 144"

Skin

FSL light gray
FSD dark gray
FSB blue
FSG green
FSY yellow
FSR red

Modify & Customize*

MOD indicates a modification to standard spec attributes
CSM indicates a customized feature

standard: RP-IND - 60 - SO - 935 - DIM -SPC - BLK - BCC - FPB

modified Lm: **MOD** - RP-IND - 60 - **MD10000LM** - 940 - DIM - MCC - ASL - SCC - RMT

custom ring Ø: **CSM** - RP-IND - **35/55/75** - SO - 840 - DIM - MRC - WHT - WCC

***MOD/CSM** placed at the beginning of an order sequence

LED

SO Standard output static white LED is equal to the delivered lumens for model listings defined in the table to the right. Standard white LED choices are 3000-4000 °K. Consult factory for additional options within range 2200-6500 °K.

HO High output static white LED is equal to the delivered lumens for model listings defined in the table to the right

MD Modify output within standard range in 5% increments up to 543 lm/linear ft.

TW Tunable White is programmable between 2700-6500 °K

WD Warm Dim ranges between 2200-3500 °K

RGBW30 | RGBW35 | RGBW40 RGB + White LED lumen output is the same as static white LED as shown in the table

(consult factory for MD, TW, WD, and RGB+W options)

Fixture Ø (in.)	Max Weight	Sections per Ring	Standard Output		High Output	
			Lumens	Watts	Lumens	Watts
24	6 lbs	1	1,702	30	3,410	60
36	9 lbs	1	2,553	45	5,115	91
48	12 lbs	1	3,404	60	6,820	121
60	15 lbs	1	4,255	75	8,525	151
72	18 lbs	1	5,106	91	10,230	181
84	21 lbs	3	5,957	106	11,935	212
96	24 lbs	3	6,808	121	13,640	242
120	30 lbs	6	8,509	151	17,050	302
144	36 lbs	6	10,211	181	20,460	363

Driver

Drivers are integral, Class 2 constant current, Universal and include two-wire 0 -10 V dimming, 1-100%.

Delivered lumen output values can be programmed to lower values than shown in 5% increments.

Consult factory for DMX commissioning with RGB+W and for DALI dimming control options.

Remote and backup battery options are available (p.8).

120-277 VAC

DIM	0-10 V/1%
DIM.1	0-10 V/.1%
DAL	DALI
DMX	Digital Multiplex (consult factory)

120 VAC

TRC	TRIAC/ ELV

SPC Standard Mounting Details

Fixture Ø (in.)	Mounting Points	Ø 2" Non-Power Canopy Qty		Standard Output			High Output		
		SO	HO	Power Feed Canopy Qty	Power Feed Canopy Size	Power Cord Qty	Power Feed Canopy Qty	Power Feed Canopy Size	Power Cord Qty
24	3	2	2	1	9"x1.5"	1	1	9"x1.5"	1
36	3	2	2	1	9"x1.5"	1	1	9"x1.5"	1
48	3	2	2	1	9"x1.5"	1	1	13"x 2"	1
60	3	2	2	1	9"x1.5"	1	1	13"x 2"	2
72	3	2	2	1	9"x1.5"	1	1	13"x 2"	2
84	6	5	5	1	13"x 2"	1	1	13"x 2"	2
96	6	5	5	1	13"x 2"	1	1	13"x 2"	2
120	6	5	4	1	13"x 2"	2	2	13"x 2"	2
144	6	5	4	1	13"x 2"	2	2	13"x 2"	3

Drawings not to scale

Standard Mounting

SPC (single point canopy)

Rings are suspended with straight, 100″ field adjustable aircraft cables individually attached to single point Ø2″ non-power canopies and a power feed canopy.

Consult factory for custom mounting options

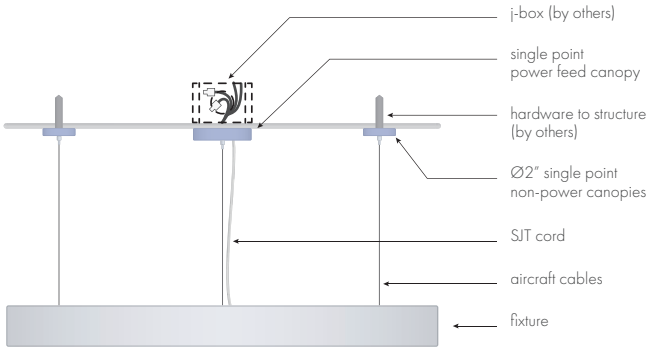

Standard Mounting

MCC (multi-cable center canopy)

Rings are suspended with multiple angled, 100″ field adjustable aircraft cables attached to a central power feed canopy. Cable angle should not be greater than 45° (see diagram).

Consult factory for ring diameters greater than 96″.

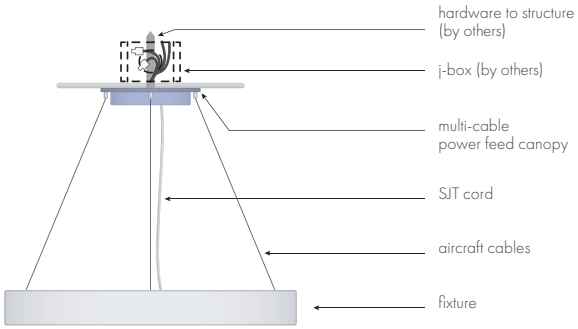

MCC Standard Mounting Details

Fixture Ø (in.)	AC Cable Qty	Min Hang Hight (over 45°)	Standard Output		High Output	
			Canopy Size	Power Cord Qty	Canopy Size	Power Cord Qty
24	3	5″	9″x1.5″	1	9″x1.5″	1
36	3	11″	9″x1.5″	1	9″x1.5″	1
48	3	17″	9″x1.5″	1	13″x 2″	1
60	3	23″	9″x1.5″	1	13″x 2″	1
72	3	29″	9″x1.5″	1	13″x 2″	2
84	6	35″	13″x 2″	1	13″x 2″	2
96	6	41″	13″x 2″	1	13″x 2″	2
120	6	consult factory	13″x 2″	1	13″x 2″	2
144	6	consult factory	consult factory		consult factory	

MRC (multiple ring cluster)

Elegant rings dynamically suspend from a central custom canopy in custom, eye-catching arrangements. 100″ field adjustable aircraft cables allow for on-site angle adjustments.

Consult our factory for required submittals.

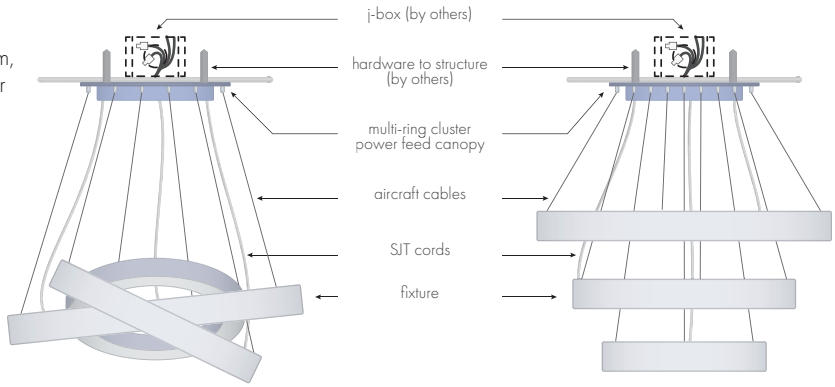

Drawings not to scale

MCC-POC (power-over-cable)

We use a powered suspension system to suspend and power Class 2 LED lighting fixtures with a thin cable, providing a refined, modern look without the need for a separate power cord.

The number of PoC cables on each ring depends on fixture size and lumen requirements. Consult factory for required submittals.

The diagram to the right illustrates MCC-PoC. Consult factory for SPC-PoC and MRC-PoC.

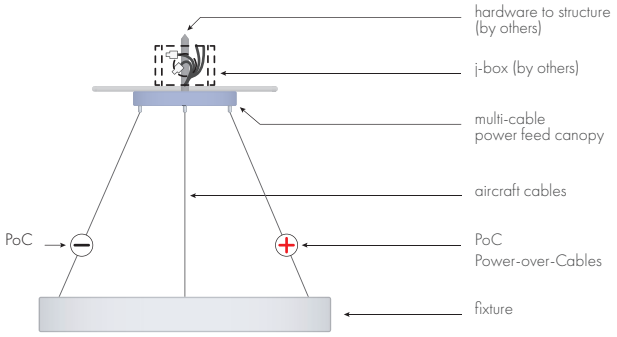

SRF (surface mounted)

Luminaire is fastened flush to mounting structure.

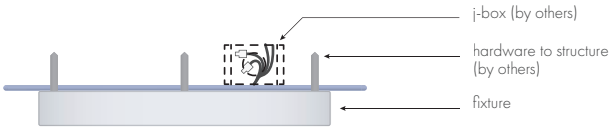

Canopies

SPC (Single Point Canopies)

Non-Power mounting canopy	Power Feed drivers inside	Power Feed drivers inside	Power Feed x2 drivers inside
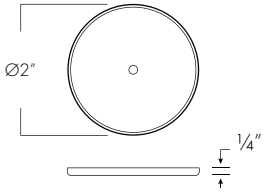	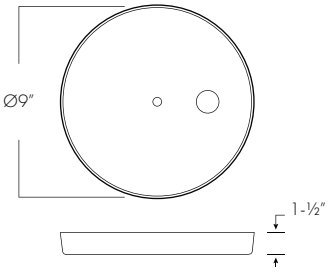	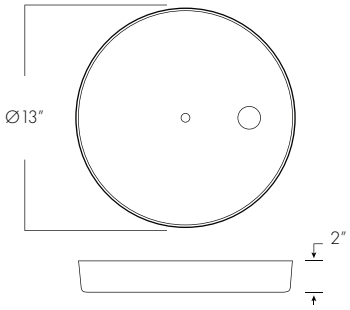	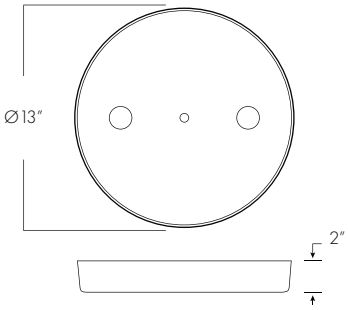
SO: Ø 24″-144″	**SO**: Ø 24″- 72″	**SO**: Ø 84″-108″	**SO**: Ø 120″-144″
HO: Ø 24″-144″	**HO**: Ø 24″-36″	**HO**: Ø 48″	**HO**: Ø 60″-144″

Drawings not to scale

MCC (Multi-Cable Center Canopies)

Power Feed	drivers inside	Power Feed	drivers inside	Power Feed (x2)	drivers inside
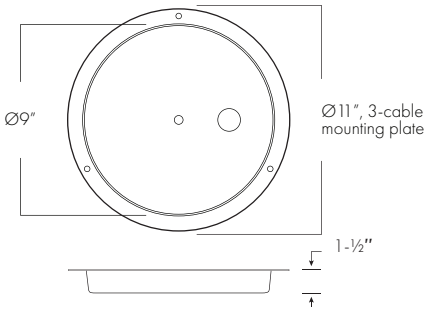		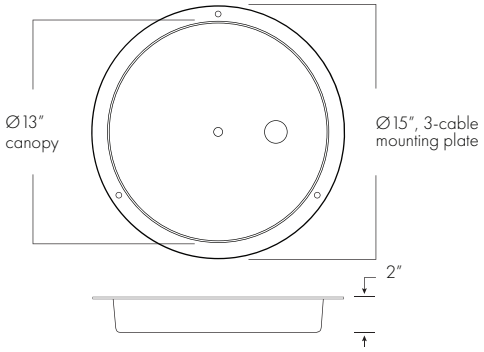		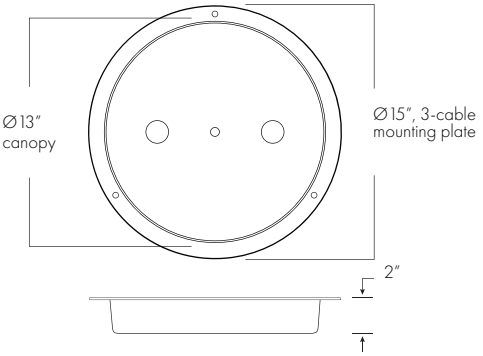	
SO: Ø 24″- 72″		**SO**: Ø 84″-120″		**HO**: Ø 72″-120″	
HO: Ø 24″-36″		**HO**: Ø 48″- 60″			

MCC canopy illustrations are shown with 3-cable mounting plates, please note Ø greater than 72″ will have 6-cable mounting plates.

MRC (Multi-Ring Canopies)

Multiple Power Feeds	
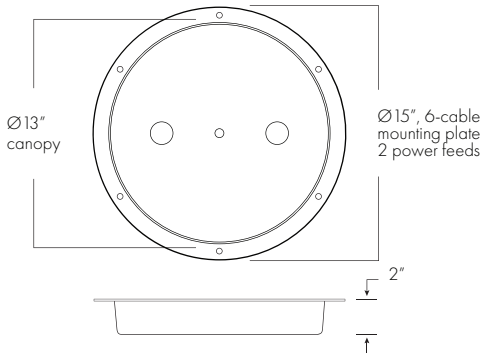	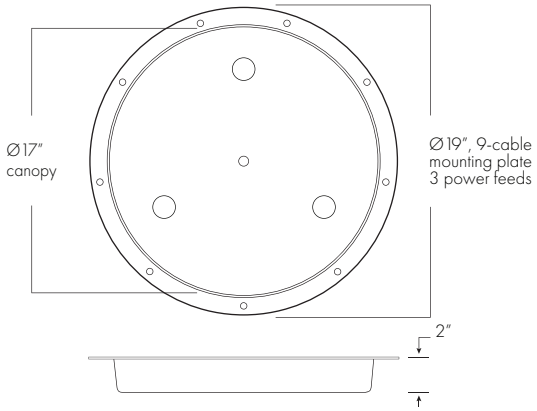
drivers inside	
Canopy is determined per order specifications; consult our factory for required submittals.	

Drawings not to scale

Fixture Finish

Powder Coat (standard colors)

WHT	BLK	GRY	ASL
matte white	matte black	matte gray	anodized silver

Powder Coat (color match)

RAL	CCL
RAL color (specify code)	custom color (provide chip)

Wood Grain (covers inner and outer walls)

WG1	WG2	WG3	WG4
ash	teak	walnut	zebrawood

Vinyl Skin (covers inner and outer walls)

CFS
carbon fiber

Canopy | Cord Finish

Canopy finish options include powder coat in standard or custom colors. When RAL or custom colors are applied to fixtures, canopies may be custom finished to match. 4-digit RAL color code or color chip must be provided.

While choosing a canopy finish, choose a power cord color.

SJT Cord

white	black	silver braid clear jacket

Standard	Canopy	Cord
WCC	white	white
BCC	black	black
SCC	silver	silver
MBC	white	silver

RAL	Canopy	Cord
RCW	RALX	white
RCB	RALX	black
RCS	RALX	silver

Custom	Canopy	Cord
CCW	CCL	white
CCB	CCL	black
CCS	CCL	silver

Match with RAL (**RALX**) or custom color (**CCL**) fixtures

Options

RMT (remote driver)

Remote driver is mounted to an aluminum plate (by Lumos) to be placed inside an electrical enclosure (by others).

The diagram to the right illustrates single point canopy mounting (SPC) with remote option (RMT).

RMT-BBU

Emergency backup battery is connected to each driver, which operates for 90 minutes. Test switch and LED indicator included. When RMT-BBU is selected, batteries and drivers are mounted to an aluminum plate (by Lumos).

DIM, DIM.1, DALI drivers are rated 120-277 VAC; TRIAC/ELV drivers are rated 120 VAC.

Drawings not to scale
Colors shown here are approximations

Acoustic Options

Our rings can be transformed into acoustical absorbing luminaires to help reduce sound reflections and reverberations in a room. Design options combine light with acoustical absorbent felt to improve the overall sound quality and appearance of a space. The felt absorbs sound waves, reducing echo and enhancing speech intelligibility, while the light source provides illumination.

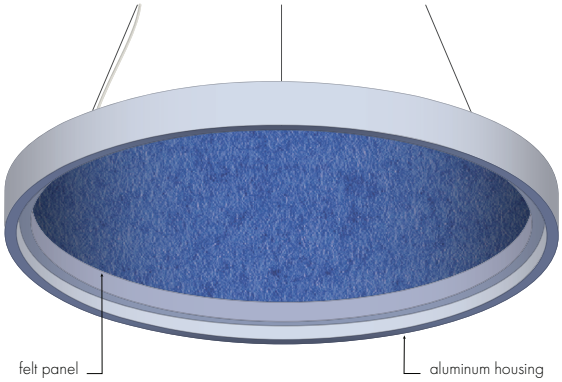

Panel

Durable ⅜″ thick felt panel centered in ring. Made from 60% recycled PET fiber with NRC .30.

Panel absorber can be combined with Skin absorber.

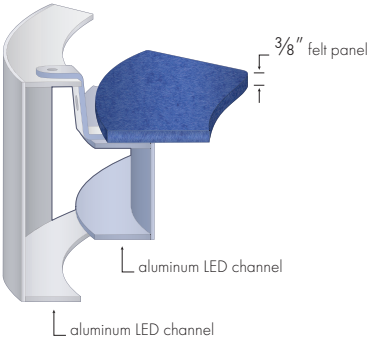

FPL light gray	FPD dark gray	FPB blue
FPG green	FPY yellow	FPR red

Skin

Inner and outer walls of ring are covered with ⅛″ thick felt made from 100% post-consumer recycled polyester fiber with NRC .70.

Skin absorber can be combined with Panel absorber.

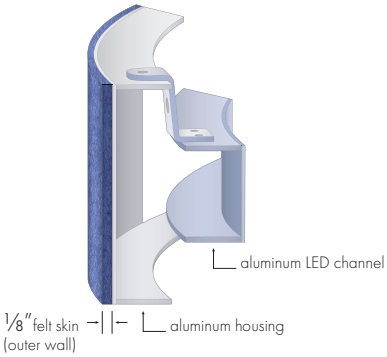

FPL light gray	FPD dark gray	FPB blue
FPG green	FPY yellow	FPR red

Drawings not to scale
Colors shown here are approximations